Florida Impact Door Systems

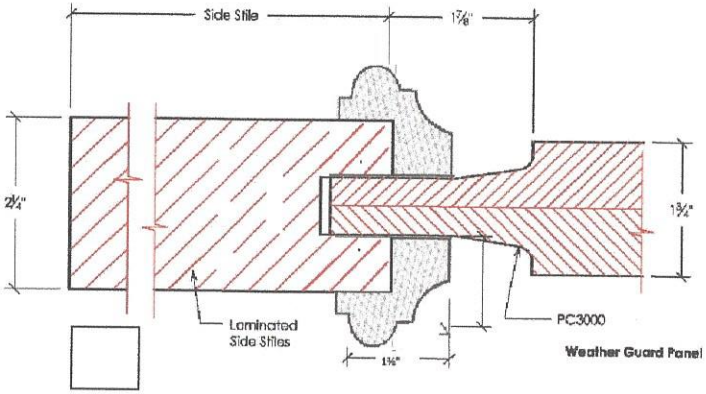

PC3000 / 205HRM

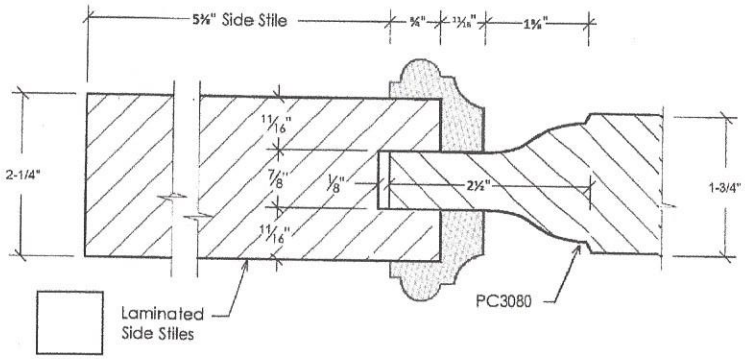

PC3080 / 205HRM

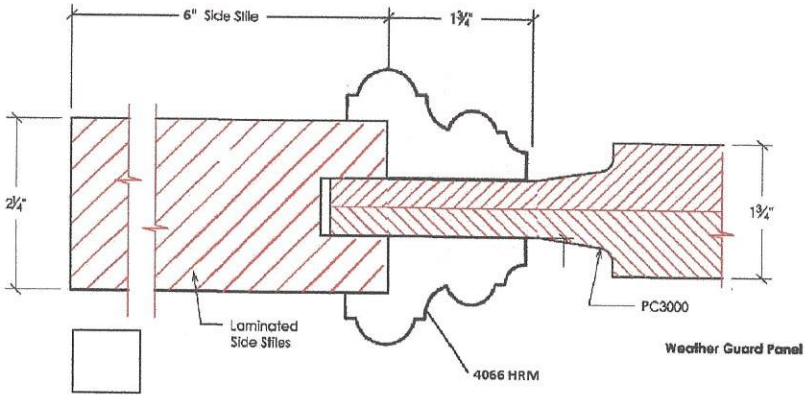

PC3000 / 4066HRM

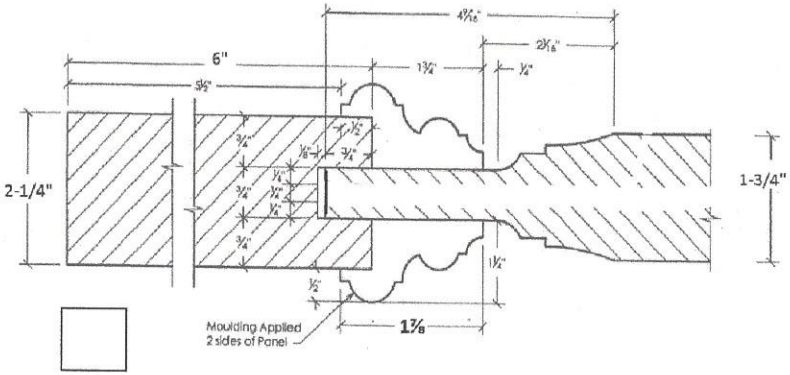

3step / 4066HRM

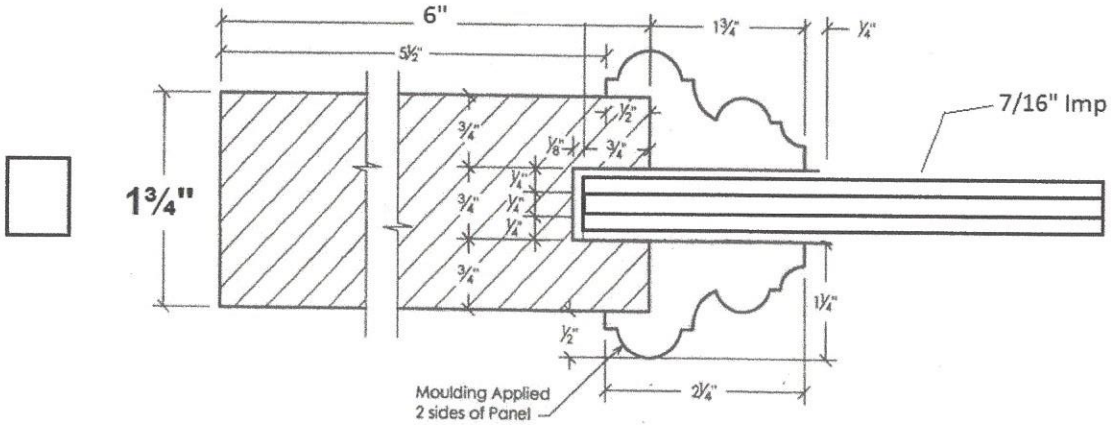

Florida Impact Door Systems

'Classic' MM4066 HRM

7/16" Impact Glass

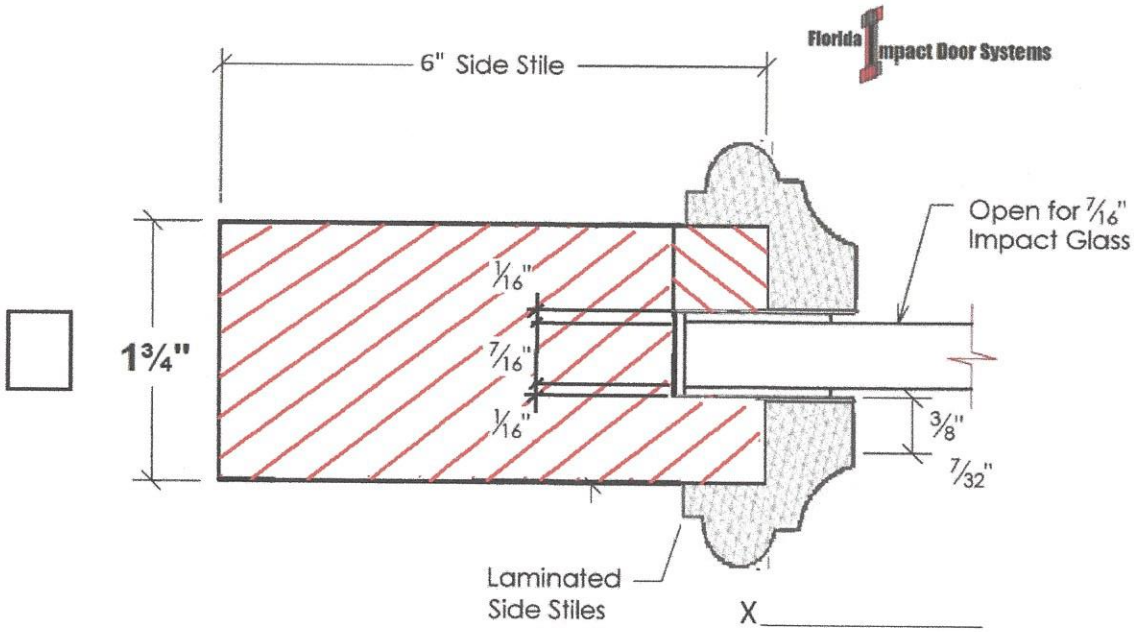

Florida Impact Door Systems

Florida Impact Door Systems

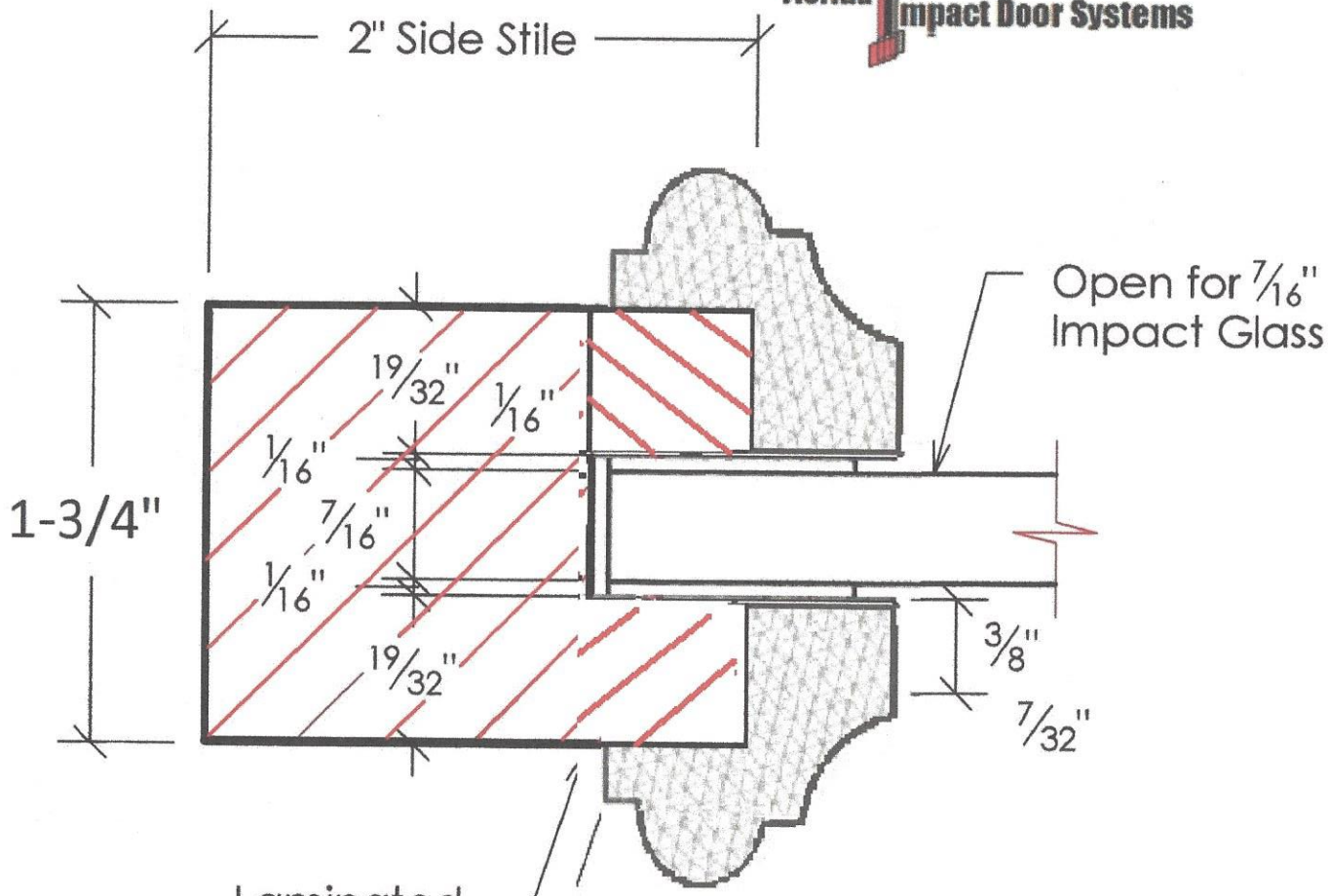

X_____